TOP 12-42 mm

OPTION 2 / TOP 12-28 mm

GROUP GA672F45P + PRF5C

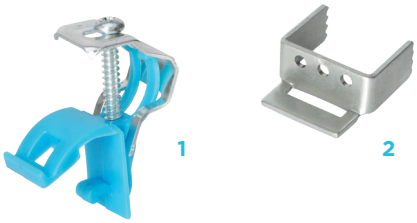

TECHNICAL DATA - GROUP

Ductility:
●●●●○

Corrosion resistance:
●●●●●

Tensile strength:
●●●●○

Clamping force:
●●●●●

The group consists of the following items:

1. GA672F45P

Material:

90% carbon steel.
10% polyamide.
Sheet thickness 0.7/1 mm.

Treatments:

Tempering: specific process to ensure lmaximum ductility.

Zinc coating: specific process to ensure maximum corrosion resistance.

Screw type:

Reinforced, Ø 4,2 mm.

2. PRF5C

Material:

100% steel. Reinforced sheet metal, 1.5 mm thick.

Treatments:

Zinc coating: specific process to ensure maximum corrosion resistance.

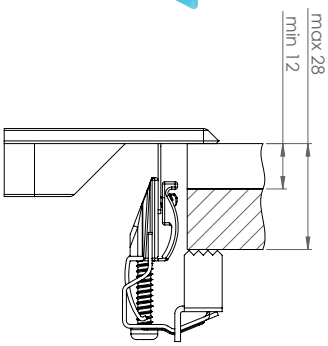

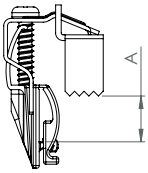

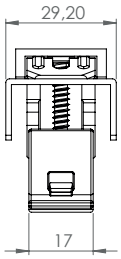

Legend
A=2/20 mm

MARCOLINI GIUSEPPE s.r.l.
Via Repubblica, 137 - 25068 Sarezzo (BS) - ITALY - Tel.: +39 030 800532 - Fax: +39 030 8900772
info@marcolinisrl.com - www.marcolinisrl.com
Cod. Fisc. e Reg. Imp. BS 01460560178 - P.IVA IT 00628410987
C.C.I.A.A. BS 289337 - Mecc. BS 038379

TOP 28-42 mm

GA672F45P

TECHNICAL DATA

Material:

90% carbon steel.
10% polyamide.
Sheet thickness 0.7/1 mm.

Treatments:

Tempering: specific process to ensure maximum ductility.

Zinc coating: specific process to ensure maximum corrosion resistance.

Screw type:

Reinforced, Ø 4,2 mm.

Ductility:
●●●●○

Corrosion resistance:
●●●●●

Tensile strength:
●●●●○

Clamping force:
●●●●●

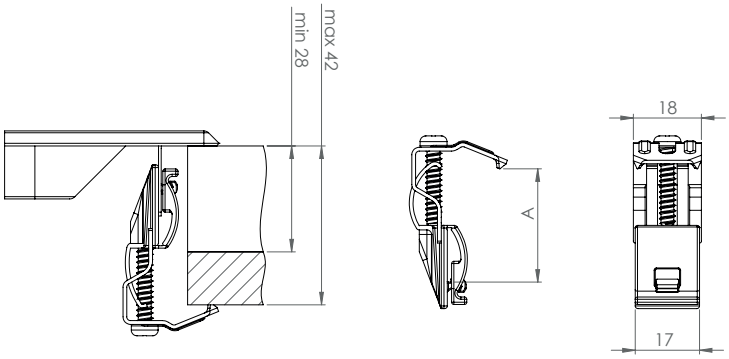

Legend
A=12/32 mm

MARCOLINI GIUSEPPE s.r.l.
Via Repubblica, 137 - 25068 Sarezzo (BS) - ITALY - Tel.: +39 030 800532 - Fax: +39 030 8900772
info@marcolinisrl.com - www.marcolinisrl.com
Cod. Fisc. e Reg. Imp. BS 01460560178 - P.IVA IT 00628410987
C.C.I.A.A. BS 289337 - Mecc. BS 038379