CLAMP EXTENSIONS

PRF5B

TECHNICAL DATA

Material:
Steel.

Ductility:
●●○○○

Corrosion resistance:
●●●●●

Tensile strength:
●●●●●

Clamping force:
●●●●●

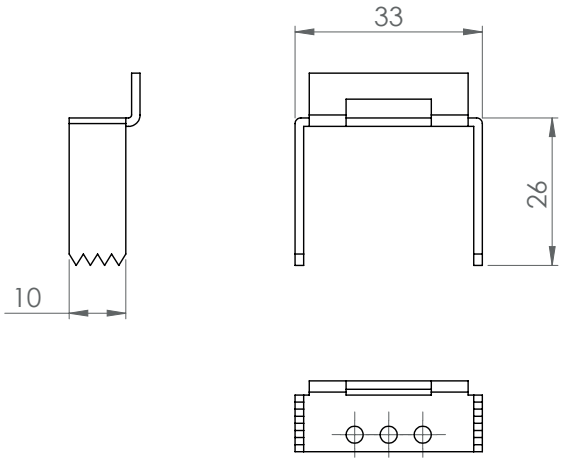

MARCOLINI GIUSEPPE s.r.l.
Via Repubblica, 137 - 25068 Sarezzo (BS) - ITALY - Tel.: +39 030 800532 - Fax: +39 030 8900772
info@marcolinisrl.com - www.marcolinisrl.com
Cod. Fisc. e Reg. Imp. BS 01460560178 - P.IVA IT 00628410987
C.C.I.A.A. BS 289337 - Mecc. BS 038379